abode

Euphoria

Exposed Rigid Tubular Riser c/w 20cm Circular Showerhead

Product features:

- Metal construction throughout
- Supplied with 1/2" F 30cm connecting hose for easy connection to bar showers
- Swivel spout for maximum flexibility
- Swivel aerator connector for maximum flexibility
- Single spray pattern showerhead

Packaged properties:

Box length: mm **Box depth:** mm

Box width: mm **Boxed weight:** 3.79 kg

Includes pop up waste?: No

Additional comments:

See AB2301 & AB2409

Product dimensions:

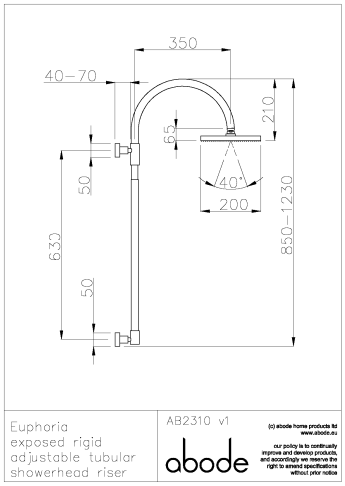

- **Overall Height / projection:** 850 - 1230 mm
- **Exit reach:** 350 mm
- **Exit height:**
- **Centre distance(s):** 630 mm

- **Base diameter(s):** 50 mm
- **Product mounted where:** Wall
- **Recommended hole diameter:**
- **Min. fitting depth required:**
- **Max. surface depth:**

Product flow characteristics:

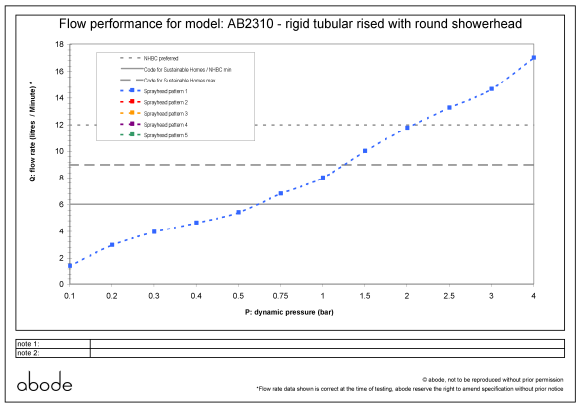

- **Min / Max water pressure:** 0.60 / 5 bar
- **Part G mixed flow rate at 3 bar (l/m):** 14.64

- **Max water temperature:** 70° C
- **Product flow characteristics:**
- **Aerator type:**
- **Includes output diverter?:** No
- **Control valve type:** ()
- **Non return valve position:**
- **Mesh particle filter size:**
- **Inlet / outlet size:** 1/2" F / 1/2" F
- **Inlet type / length:** Flexi / mm
- **Shower hose type / length:**

Warranty Summary (Full details available on request):

- Materials and workmanship defects warranted for 5 years
- Valves and working parts warranted for 2 years
- Surface warranty defects warranted for 1 year
- O-rings, hoses & gaskets warranted for 1 year

Care instructions:

- Clean the mixers and showers regularly as required, using soap, do not use any other cleaners.
- Regular cleaning will prevent the build up of lime scale and dirt
- After cleaning rinse thoroughly with clean water to remove any cleaner residue
- Residues of liquid soaps, shampoos and shower foams can also cause damage, so rinse with clean water after using, avoid contact with any abrasives